SHEET PILING

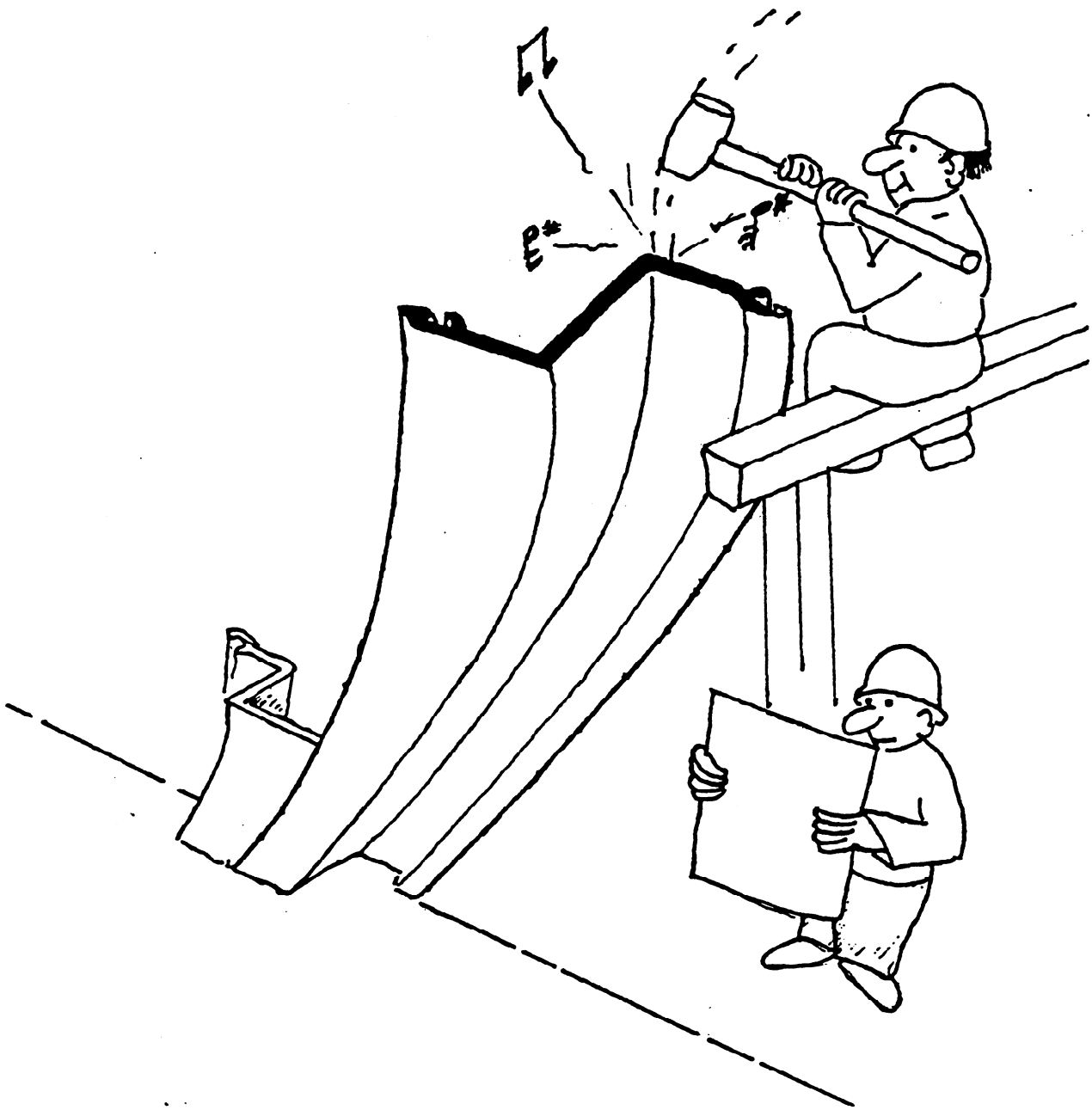

SHEET PILING WALLS

Cantilever sheetpiling walls depend on the passive resisting capacity of the soil below the depth of excavation to prevent overturning. The depth of sheetpiling walls below the bottom of the excavation are determined by using the difference between the passive and active pressures acting on the wall. The theoretical depth of pile penetration below the depth of excavation is obtained by equating horizontal forces and by taking moments about an assumed bottom of piling. The theoretical depth of penetration represents the point of rotation of the piling. Additional penetration is needed to obtain some fixity for the piling. Computed piling depths are generally increased 20% to 40% to obtain some fixity and to prevent lateral movement at the bottom of the piling.

It is not within the scope of this text to go into great detail concerning the design and analysis of sheet piling. A few of the more common situations complete with sample problems are presented on the following pages. A more adequate. and lengthy dissertation with example problems can-be found in the USS Steel Sheet Piling Design Manual.

The cohesive value of clay adjacent to sheet pile walls approaches zero with the passage of time. Design and analysis for clay soil conditions must generally meet the conditions of cohesionless soil design if the sheet piling support system is to be in use for more than a month. For those few cases where a clay analysiswill be appropriate, reference is made to the USS Steel Sheet Piling Design Manual.

It is possible to have negative pressure values with cohesive soils. Since cohesive soil adjacent to sheet pile walls loses its effective cohesion with the passage of time it is recommended that negative values be ignored. Do not use negative pressure values for the analysis of sheet piling systems. Any theoretical negative values should be converted to zero.

Friction:

The friction value at the soil-wall interface, or adhesion between the clay and the wall, should be ignored with sheet piling walls when the walls are in close proximity to pile driving or other vibratory operations - including functional railroad tracks. Similarly, above the depth of excavation, the cohesive value of the clay of a combined clay-sand soil should be ignored under the same circumstances.

Wall Stability:

The stability of cantilever steel sheet pile walls will need to be considered in cohesive soils. The sheetpiling will fail if this height is exceeded. The stability number relates to kick out at the toe of the sheetpiling wall. Therefore, for design of sheetpiling walls in cohesive soils, the first step should be the investigation of the limiting height. A stability number S has been defined for this analysis as:

$$S = C/\gamma_e H'$$

and was derived from the net passive pressure in front of the wall in the term:

$$4C - \gamma_e H > 0$$

Teng found that adhesion of the cohesive soil to the sheets would allow modification to the stability equation and adjusted S from 0.25 to 0.31. A minimum stability number of 0.31 times an appropriate factor of safety could be used in design. However, when dynamic loadings near or at the sheets is considered (such as trains, pile driving operations, heavy vibrational motions, etc.) the adhesional effect must be excluded from the design and a stability number of S = 0.25 is to be used with an appropriate factor of safety in the height determination equation.

$$S(S.F.) \leq C/\gamma_e H'$$

$$\text{or:} \quad H' \leq C/\{S(S.F.)(\gamma_e)\}$$

Where:

- S = Stability number = 0.25 or 0.31
- $S.F.$ = Safety factor (in the range of 1.25 to 1.50)
- γ_e = Effective density of the soil above the excavation line
- H' = H plus equivalent soil height of any uniform surcharge
- C = $q_u/2$
- q_u = unconfined compressive strength

Rakers:

When rakers are supported on the ground the allowable soil bearing capacity for the raker footing must be considered. Cohesionless soil having small internal friction angles (ϕ) will have lower soil bearing capacity. Additionally, when the footings are sloped relative to the ground surface reduced soil bearing capacities will result. A Department of the Navy publication (NAVFAC DM-7) includes reduction factors for footings near the ground surface. See the graphs entitled, "Ultimate Bearing Capacity of Continuous Footings With Inclined Loads" in Appendix B.

The NAVFAC figures assume that soil will be replaced over the footings. When such is the case a factor of D/B (bottom of footing distance below ground surface divided by the footing width) may be used. When the bottom of footing is at grade no D/B factor is to be used. Good judgement will be needed to determine an effective D/B value based on anticipated construction.

The safety factor of 3 for footings recommended by NAVFAC is generally considered to be for permanent installations. For short term shoring conditions a safety factor of 2 might be used. A reduced safety factor, however, could allow greater soil settlement, which in turn would permit additional outward wall rotation. Therefore, when wall deflection or rotation is not deemed critical a safety factor of 2 may be used for short term conditions.

Tieback Walls:

See the Chapter on TIEBACKS for analysis of any tieback systems. Tieback sheetpiling wall sample problems are included in the tieback chapter.

Sample Problems:

Sample problems are included in this chapter to demonstrate the principles of sheetpiling design for both cohesionless and for cohesive soils. Additional soil pressure diagrams which relate to sheet piling are presented in the section on soldier piles.

CANTILEVER SHEET PILING - GRANULAR SOIL

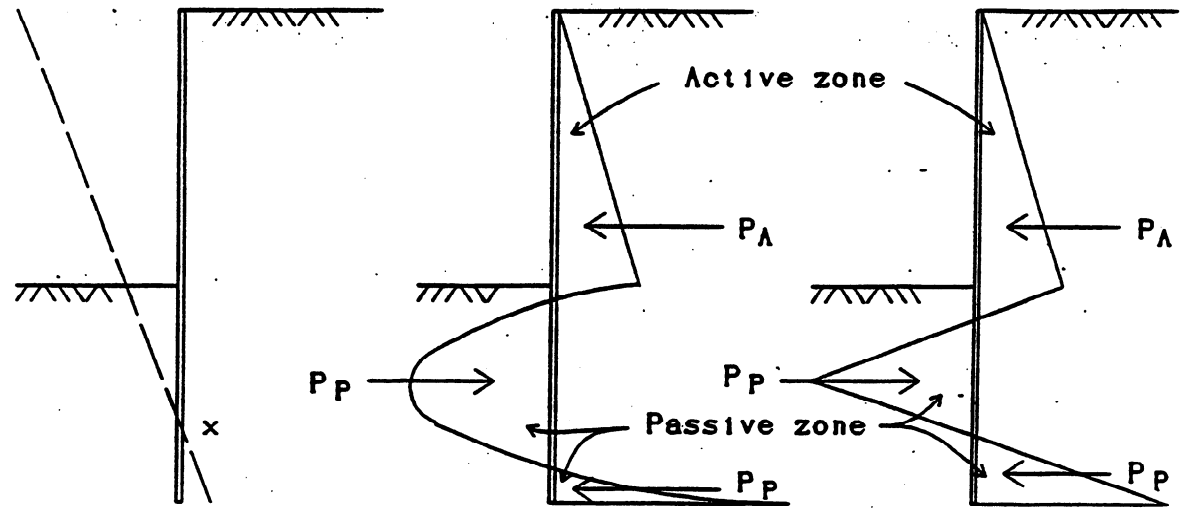

Assumed elastic line of sheet piling with rotation about pt. x

Probable soil pressure distribution

Simulated pressure diagram (Granular soil, no ground water)

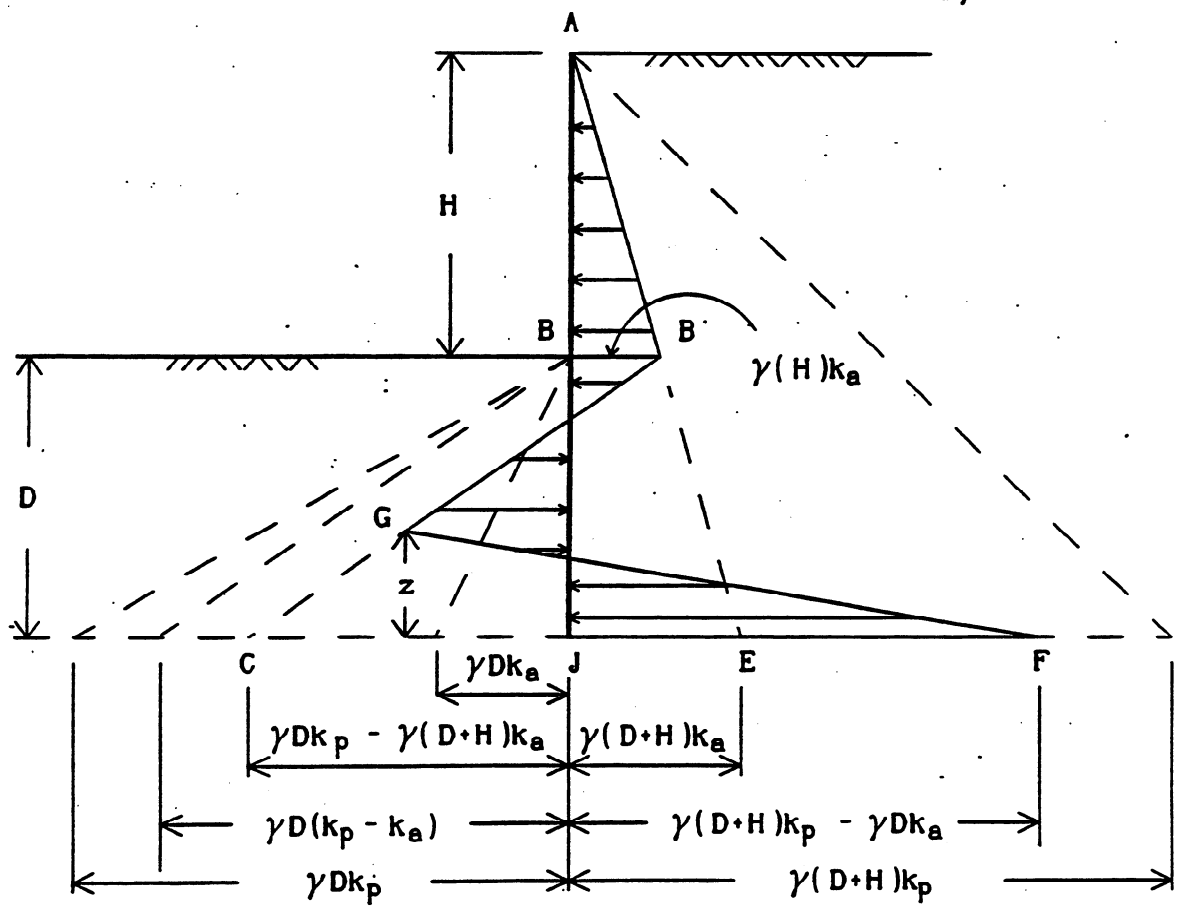

FIGURE 8-1

CANTILEVER SHEET PILING - GRANULAR SOIL (CONVENTIONAL METHOD)

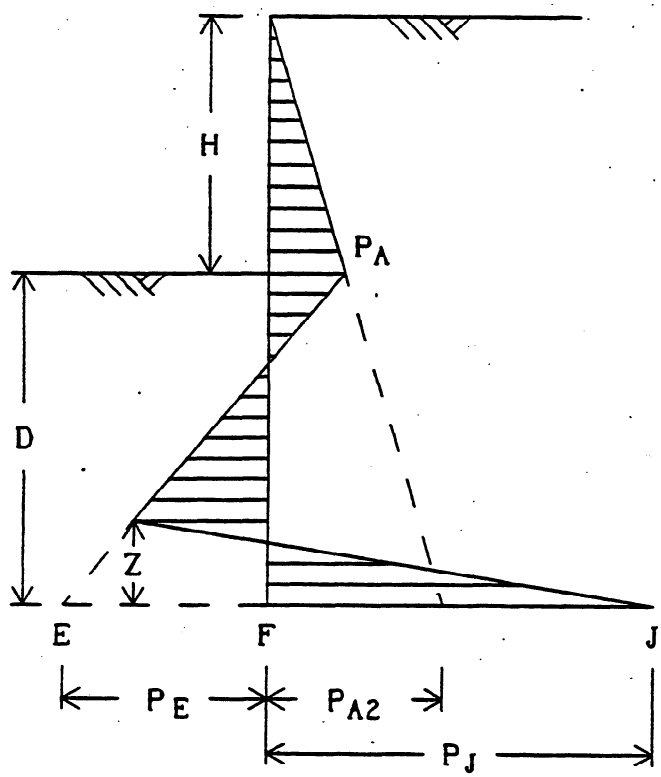

Granular soil.

No surcharge.

$P_A = \gamma H K_a = KwH$

$P_{A2} \doteq \gamma(D + H)K_a$

$P_E = \gamma D K_p - \gamma(D + H)K_a$

$P_J = \gamma(D + H)K_p - \gamma D K_a$

FIGURE 8-2

$$\Sigma F_H = 0 = (H)(P_A)/2 + (P_A + P_{A2})(D)/2 + (P_E + P_J)(Z)/2 - (P_E + P_{A2})(D)/2$$

$$\therefore Z = \{(P_E + P_{A2})(D) - (H)(P_A) - (P_A + P_{A2})(D)\}/(P_E + P_J)$$
$$= \{(P_E - P_A)(D) - (H)(P_A)\}/(P_E + P_J)$$

$$\Sigma M_F = 0$$
$$= \{(H)(P_A)/2\}[H/3 + D] + (P_A)(D)[D/2] + \{(P_{A2} - P_A)(D/2)[D/3]\} + \{(P_E + P_J)(Z)/2\}[Z/3] - \{(P_E + P_{A2})(D/2)\}[D/3]$$

$$\therefore Z^2 = \{(P_E - 2P_A)[D^2] - 3(H)(P_A)[H/3 + D]\}/(P_E + P_J)$$

Solve the two equations simultaneously for D (or use trial and error methods).

In most real situations there will be some sort of surcharge present. Simplifying the resulting pressure diagrams (using-sound engineering judgement) should not alter the results significantly and will make the problems much easier to resolve. The surcharge pressures can be added directly to the soil diagram or may be drawn separately. Passive resistance may be initially reduced by dividing K_P by 1.5 to l.75, which will increase the moment requirement; or alternatively increase the computed D by 20% to 40% to fix the pile tips.

CANTILEVER SHEET PILING: GRANULAR SOILS
SIMPLIFIED METHOD[1] (After Teng)

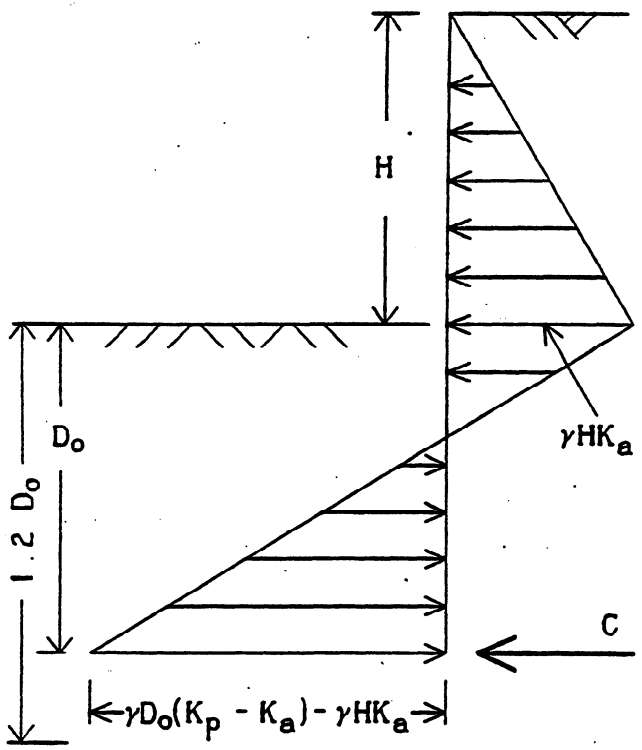

Passive pressures on the right side of the sheet piling are replaced by a force C (Not used in the computations).

FIGURE 8-3

The simplified method is useful in the initial design of cantilever sheet piling in homogenous granular soils, but the conventional method must be used for final analysis.

To use the simplified method:

1. Determine K_a, K_p, and K_p/K_a (Log-spiral may be used).
2. Determine α (depth of water table in relation to H) as shown in Figure 8-4 on the following page.
3. From Figure 8-4 determine values for the ratios D/H (D_0/H), and $M_{max}/(\gamma' K_a H^3)$.
4. Compute D (D_0) and M_{max}.
5. Increase D (D_0) by 20% to 40%. Alternatively, K_p could be reduced initially by dividing by 1.5 to 1.75; however this will result in higher moment requirements.

[1]Taken from USS Sheet Piling Design Manual (1984) pgs 20-23.

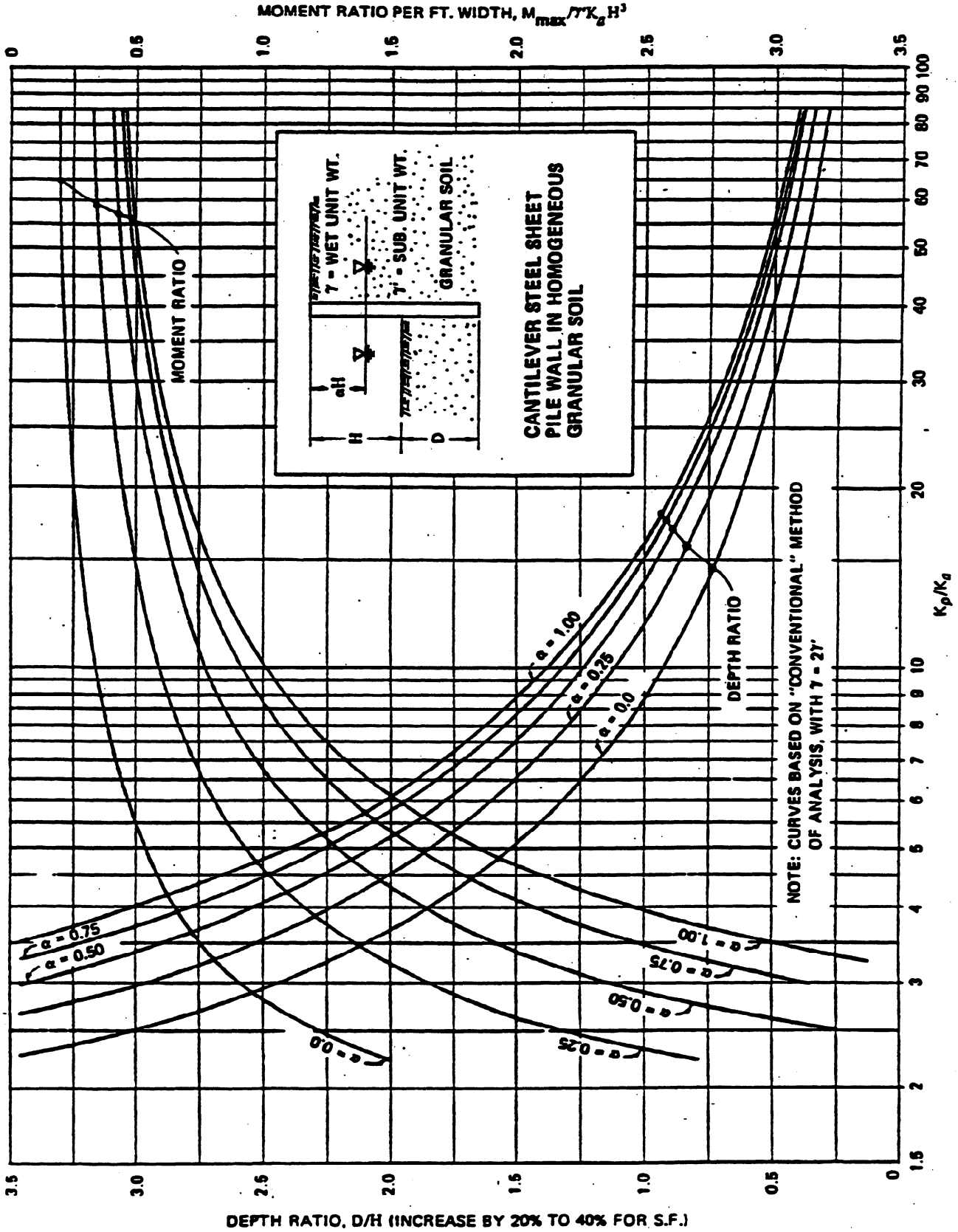
MOMENT RATIO PER FT. WIDTH, $M_{max}/\gamma' K_a H^3$
0
0.5
1.0
1.5
2.0
2.5
3.0
3.5
MOMENT RATIO
γ = WET UNIT WT.
γ' = SUB. UNIT WT.
GRANULAR SOIL
aH
H
D
CANTILEVER STEEL SHEET
PILE WALL IN HOMOGENEOUS
GRANULAR SOIL
α = 1.00
α = 0.75
α = 0.50
α = 0.25
α = 0.0
DEPTH RATIO
NOTE: CURVES BASED ON "CONVENTIONAL" METHOD
OF ANALYSIS, WITH γ = 2γ'
K_p/K_a
1.5
2
3
4
5
6
7
8
9
10
20
30
40
50
60
70
80
90
100
DEPTH RATIO, D/H (INCREASE BY 20% TO 40% FOR S.F.)

FIGURE 8-4

SAMPLE PROBLEM 8-1: CANTILEVER SHEET PILING

This problem serves as a comparison between the Simplified Method (after Teng) and the conventional procedure when a surcharge load is included.

Given:

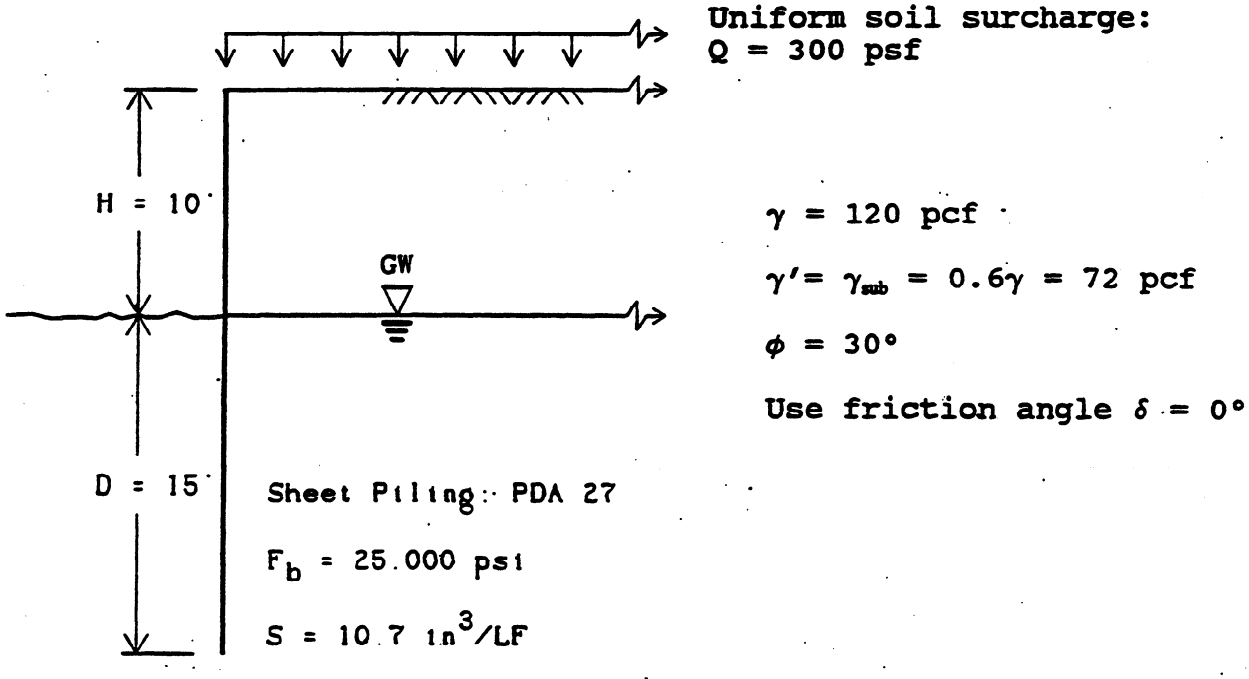

FIGURE 8-5

Solution:

Use the log-spiral curves (Figure 8) to determine K_a and K_p.

$\beta/\phi = 0$ and $\delta/\phi = 0$

K_p for level surface $\approx 6.4R$

R from the table = 0.467
$K_p \approx 6.4(0.467) = 3.0$

$K_a \approx 0.33$ $\qquad$ $K_p - K_a = 3.0 - 0.33 = 2.67$

Since the surcharge load cannot be handled in the usual manner, an equivalent H_s will be calculated and added to the existing H.

$H_s = Q/\gamma = 300/120 = 2.5'$

Adjusted $H = H' = 10.0 + 2.5 = 12.5'$

SIMPLIFIED METHOD

Find D/H from Figure 8-4 (which assumes γ' is equal to $\gamma/2$) using $K_p/K_a = 3.0/0.33 = 9.1$

The water/excavation depth ratio (α) = 8/8 = 1.0
Depth ratio = D/H = 1.5, and moment ratio $M_{max}/\gamma' K_a H^3 = 1.1$
Then D = 1.5H = 1.5(10.5) = 15.75′
Increase D by 30% since K_p was not reduced initially.
∴ D = 1.3(15.75) = 20.5′ > 15′ shown on the shoring plan.

$M_{max} = 1.1\gamma' K_a H^3 = 1.1(120/2)(0.33)(10.5)^3 = 25{,}213$ Ft-Lb

S required = M/f_s = 25,213(12)/25,000 = 12.1 > 10.7 in^3

∴ Must use sheet pile with greater S or higher grade of steel.

CONVENTIONAL METHOD

γ = 120 PCF

γ' = 72 PCF

ϕ = 30°

δ = 0°

K_a = 0.33

K_p = 3.0

$K_p - K_a$ = 2.67

H = 8′

H′ = 10.5′

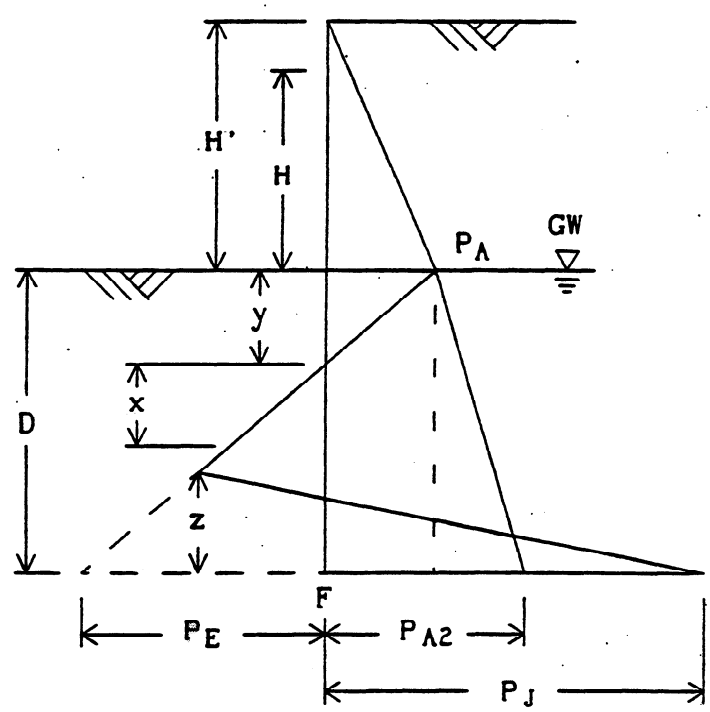

FIGURE 8-6

$P_A = \gamma H' K_a = 120(10.5)(0.33) = 416$ psf

$P_{A2} = P_A + \gamma' D K_a = 416 + 72(0.33)D = 416 + 24D$ psf

$P_E = \gamma' D(K_p - K_a) - P_A = 72(2.67)D - 416 = 192D - 416$ psf

$P_J = \gamma' D(K_p - K_a) + \gamma H' K_p = 72(2.67)D + 120(10.5)(3.00)$

$= 192D + 3{,}780$ psf

$$\Sigma F_H = 0$$
$$= H'(P_A)/2 + D(P_A + P_{A2})/2 + Z(P_E + P_J)/2 - D(P_E + P_{A2})/2$$

$$\therefore Z = [D(P_E + P_{A2}) - H'(P_A) - D(P_A + P_{A2})]/(P_E + P_J)$$

$$[D(192D - 416 + 24D + 416) - 10.5(416) - D(416 + 416 + 24D)]/(192D - 416 + 192D + 3{,}780)$$

$$= (D^2 - 4.33D - 22.75)/(2D + 17.52)$$

$$\Sigma M_F = 0$$
$$= \{H'(P_A)/2\}[D + H'/3] + D(P_A)[D/2] + \{D(P_{A2} - P_A)/2\}[D/3] + \{Z(P_E + P_J)/2\}[Z/3] - \{D(P_E + P_{A2})/2\}[D/3]$$

$$= \{10.5(416)/2\}[D + 3.5] + 416[D^2/2] + \{D(416 + 24D - 416)/2\}[D/3] + \{Z(192D - 416 + 192D + 3{,}780)/2\}[Z/3] - \{D(192D - 416 + 416 + 24D)/2\}[D/3]$$

$$0 = D^3 - 6.5D^2 - 68.25D - 2DZ^2 - 17.52Z^2 - 238.88$$

By trial and error $D \approx 14.01'$ and $Z \approx 2.48'$
Increase D by 30% for a safety factor: $1.3(14.01) = 18.2 > 15'$

<u>Find Maximum Moment:</u>

Locate point of zero pressure (At distance x below y):

$y = P_A/\gamma'(K_p - K_a) = 416/(72)(2.67) = 2.16'$

ΣP_A at $y = (H' + y)(P_A)/2 = (10.5 + 2.16)(416)/2 = 2{,}633$ Lb

Distance x where $\Sigma P_A = \Sigma P_p$: $2{,}633 = [\gamma'(K_p - K_a)x^2]/2$

Solve for x : $x = 5.23'$ (This is the plane of zero shear)

$$M_x = \{H'(P_A)/2\}[H'/3 + y + x] + \{y(P_A)/2\}[2y/3 + x] - 2{,}633[x/3]$$

$$= 2{,}184[10.89] + 449.28[6.67] - 2{,}633[1.74] = 22{,}199 \text{ Ft-Lb}$$

S Required $= 22{,}199(12)/25{,}000 = 10.66 < 10.7$ in^3

Indicating the sheet piling is adequate.

Maximum moment derived by simplified method (25,213) is more than the moment derived by the conventional method (22,199).

<u>Conclusion:</u>

The simplified method does not appear very accurate for determining moment when surcharge loads are involved.

SAMPLE PROBLEM 8-2: STEEL SHEET PILING WITH RAKER

Given:

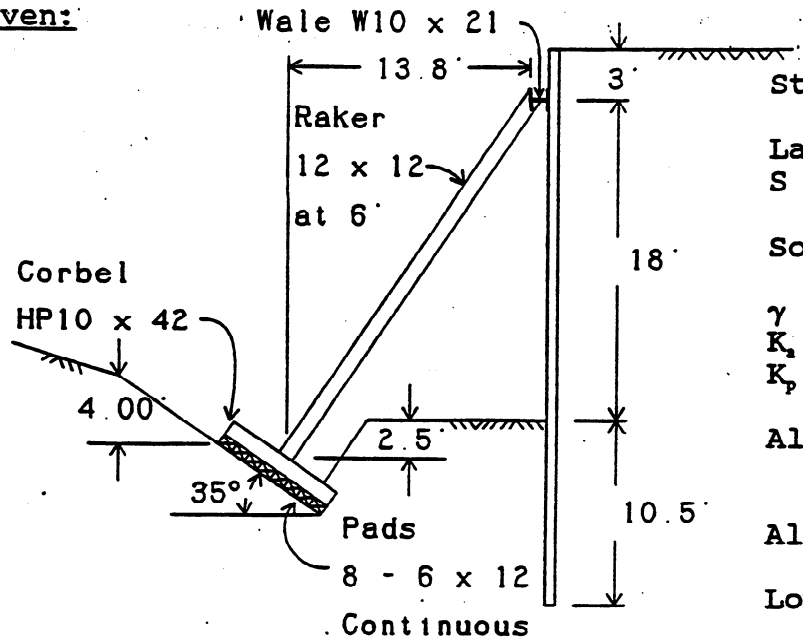

FIGURE 8-7

Steel Sheet Pile:

Larssen IIn
$S = 20.5\ in^3/LF$

Soil Properties:

$\gamma = 110$ pcf $\phi \approx 29°$
$K_a = 0.35$ $K_p = 2.88$
$K_p - K_a = 2.53$

Allowable Soil Bearing Capacity = 1 tsf

All Lumber = Rough size

Low Risk Condition

Solution:

$Kw = K_a\gamma = 0.35(110) = 38$ pcf

Use minimum surcharge = 72 psf

$P_A = 0.71KwH = 0.71(38)(21) = 566.6$ psf
$0.2H = 0.2(21) = 4.2'$

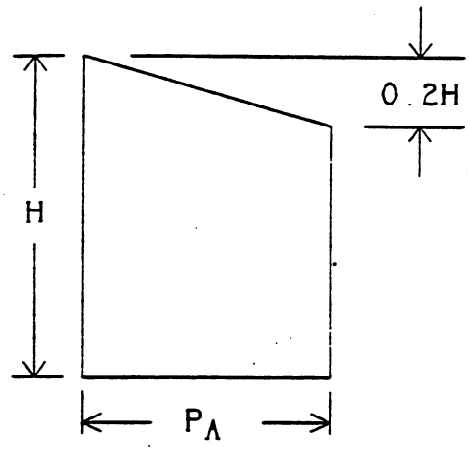

FIGURE 8-8

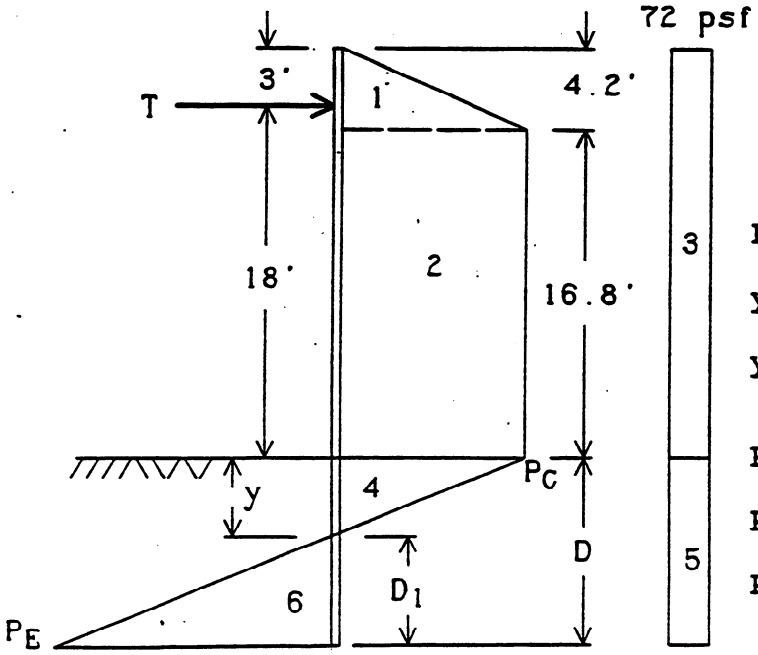

FIGURE 8-9

$P_A = 566.6$

$y = P_A/\gamma(K_p - K_a)$

$y = 566.6/(110)(2.53)$
$= 2.04'$

$P_E = \gamma(K_p - K_a)D_1$

$P_E = 110(2.53)D_1$

$P_E = 278.3D_1$

Determine d_1 by taking moments about T:

Moment Arms

1. $\{2(4.2)/3\} - 3 = -0.2$
2. $1.2 + 16.8/2 = 9.6$
3. $\{21/2\} - 3 = 7.5$
4. $18 + \{2.04/3\} = 18.68$
5. $18 + (y + D_1)/2 = 19.02 + D_1/2$
6. $20.04 + 2D_1/3$

Areas

1. $566.6(4.2)/2 = 1189.86$
2. $16.8(566.6) = 9518.88$
3. $21(72) = 1512.00$
4. $2.04(566.6)/2 = 577.93$
5. $72(2.04 + D_1) = 146.88 + 72D_1$
6. $-278.3D_1^2/2 = -139.15D_1^2$

$$\Sigma_{Areas} = 12{,}945.55 + 72D_1 - 139.15D_1^2$$

Moment-Areas

1. -237.97
2. $91{,}381.25$
3. $11{,}340.00$
4. $10{,}795.73$
5. $2{,}793.66 + 1{,}442.88D_1 + 36D_1^2$
6. $-2{,}787.17D_1^2 - 92.77D_1^3$

$$\Sigma = 116{,}072.67 + 1{,}442.88D_1 - 2{,}751.17D_1^2 - 92.77D_1^3 = 0$$

By trial and error, or other means: $D_1 = 6.13'$
$D = D_1 + y = 6.13 + 2.04 = 8.17'$

Add 30% to D: $1.3(8.17) = 10.6' \approx 10.5'$ shown on plan

Determine T:

T = Active Pressures - Passive Pressures = Σ_{Areas}

$= 12{,}945.55 + 72D_1 - 139.15D_1^2$

$= 12{,}945.55 + 72(6.13) - 139.15(6.13)^2$

$= 8158$ Lb/LF

Determine Maximum Moment And Section Modulus Required:

P_A at T = 72 + (3/4.2)(566.6) = 476.71 psf
Area = 3(72) + 3(476.71 - 72)/2 = 823.07 Lb/LF
Area at 4.2′ = 72(4.2) + 4.2(566.6)/2 = 1,492.26 Lb/LF

1492.26 - 823.07 = 669.19 Lb/LF ≈ 669 Lb/LF

8,158 - 823.07 = 7,334.93 Lb/LF ≈ 7335 Lb/LF

7,334.93 - 669.19 = 6,665.74 Lb/LF ≈ 6666 Lb/LF

6,665.74/638.6 = 10.44′ (Where 638.6 = P_A + 72 psf)

16.80 - 10.44 = 6.36′

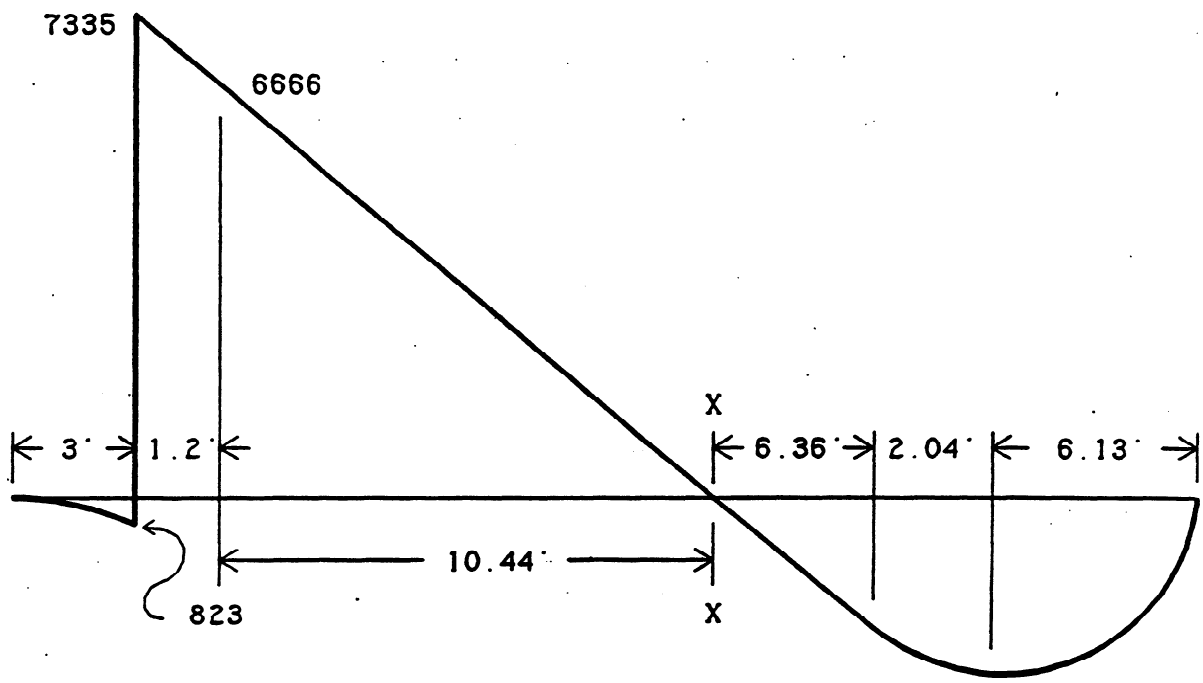

SHEAR DIAGRAM

FIGURE 8-10

ΣM_x = 4.2(566.6)[4.2/3 + 10.44]/2 + 566.6[10.44][10.44/2]
- 8,158(11.64) + 72(14.64)[14.64/2]

= - 42,277 Ft-Lb/LF

S Required = 42,277(12)/25,000 = 20.3 in^3/LF

S Furnished = 20.5 > 20.3 in^3/LF

Check Wales: (W10 X 21)

$M \approx WL^2/10 = 8{,}158(6)^2(12)/10 = 352{,}426$ In-Lb

S Required = M/S = 352,426/22,000 = 16.02 in^3

S Furnished = 21.5 > 16.0 in^3

Check Raker: (12 X 12 @ 6' Spacing)

$L = [(20.5)^2 + (13.8)^2]^{1/2} = 24.71'$

Load per raker = 8,158(6)(24.71/13.8) = 87,645 Lbs

$f_c = P/A = 87{,}645/(12)(12) = 609$ psi

Allowable $F_c = 480{,}000/[(24.71)(12)/12]^2 = 786 > 609$ psi

Check Pads: (6 X 12)

Check soil bearing pressure per NAVFAC for sloping ground condition. See "Ultimate Bearing Capacity of Continuous Footings With Inclined Load", Appendix B.

Compute D/B (ratio of footing depth to footing width):
(D/B) = (4.00)/8.00 = 0.50

From the Figure $N_{\gamma q} \approx 14$

$q_{ult} = C(N_{cq}) + (1/2)(\gamma B)(N_{\gamma q})$

$= 0 + 1/2(110)(8)(14) = 6{,}160$ psf

Safety Factor = 2, $\therefore q_{Allowable} = 6{,}160/2 = 3{,}080 > 2{,}000$ psf

Soil bearing area needed = 87,645/2,000 = 43.82 Ft^2

With 8' width: "L" needed = 43.82/8 = 5.48 < 6.00' spacing

Length for flexure = pad length/2 - flange width/2

= 5.48/2 - 0.84/2 = 2.32'

Moment per foot width = $WL^2/2 = 2{,}000(2.32)^2/2 = 5{,}382$ Ft-Lb/LF

$S = bh^2/6 = 12(6)^2/6 = 72$ in^3

$f_b = M/S = 5{,}382(12)/72 = 897 < 1500$ psi

Length for horizontal shear = 5.48/2 - 0.84/2 - 0.50 = 1.82'

$f_v = 3V/2A = [3(2{,}000)(1.82)]/[2(6)(12)] = 75.83 < 140$ psi

Check Corbel: (HP10 x 42)

Load per foot = 5.48(2,000) = 10,960 Lb/LF

Length of cantilever = 8/2 - 1/2 = 3.5′

$M = WL^2/2 = 10,960(3.5)^2(12)/2 = 805,560$ In-Lb

$f_b = M/S = 805,560/43.4 = 18,561 < 22,000$ psi

Summary:

Corbel: 12 x 12 Timber could not be used in lieu of the HP10 x 42 due to excessive compressive crushing.

Pads: Pads are shown continuous. No splices may be allowed at critical flexure and shear locations. Continuous pads are needed under raker corbels for a length of 5′ - 6" minimum.

Sheet Piling: A slightly less stiff sheet piling section could have been used . When sheet piling is sufficiently flexible it may be of advantage to use Rowe's Moment Reduction Theory. For stiff sheet piling Rowe's theory will provide no advantage for moment reduction.

Raker: Substitution of a steel member for the 12 x 12 timber would have permitted wider spacing of the rakers if the pad configuration does not control. Placement of the wale at a lower elevation would decrease the axial load on the raker (due to angular change) and might also benefit the design of the pads and corbels. Installation of ribbons on the rakers is suggested to limit lateral deflection.

Note: Corbels and wales should be checked for web stiffeners at point of contact with the rakers. Also check the wall/wale/raker connection for the vertical component of the raker force.

CANTILEVER SHEET PILING - COHESIVE SOIL (ϕ = 0 METHOD) *

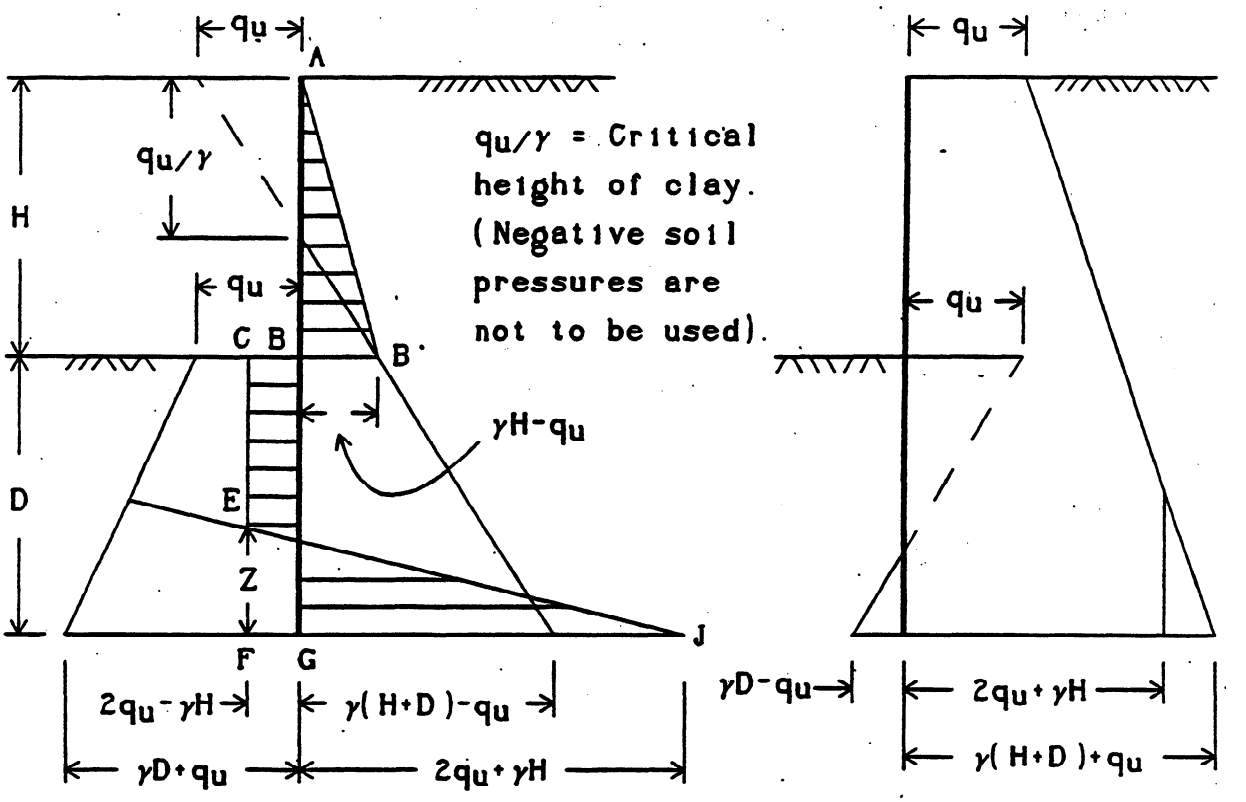

FIGURE 8-11

Use a safety factor by reducing the shear strength of the clay by 50% to 70%, or increase D by 20% to 40%. $H_c = 2q_u/\gamma$ = Critical height of the wall. ($H_c = 4C/\gamma$ since $C = q_u/2$). Theoretically the wall will fail if $H > 4C/\gamma$.

$BB' = \gamma H - q_u \geq 0$ (If not, see note below)

$\Sigma F_H = 0$ = Area <u>ABB'</u> - Area <u>BCFG</u> + Area <u>JEF</u>

$\Sigma M_G = 0$

Solve the two equations simultaneously for D and Z. Determine maximum moment and section modulus required.

When applicable, or when the system will be in use for more than one month, investigate the condition when the clay pressures approach those for a granular soil above the depth of excavation. Hence, assume C approaches 0 and ϕ = 20° to 30° (See the following page).

* Note: If $\phi \neq 0$ or if $BB' < 0$, see following page.

CANTILEVER SHEET PILING - COHESIVE SOIL (ALTERNATE METHOD)

This approach should be used only when $\phi \neq 0$ or $BB' \leq 0$.

If $\phi > 0$, then $BB' = K_a \gamma H$, where $K_a = \tan^2(45° - \phi/2)$ for level ground.

If $BB' < 0$, then assume cohesion $C = 0$ and use $\phi = 20°$ to $30°$.

BB' then $= \gamma H$ vertically and $K_a \gamma H$ acting horizontally.

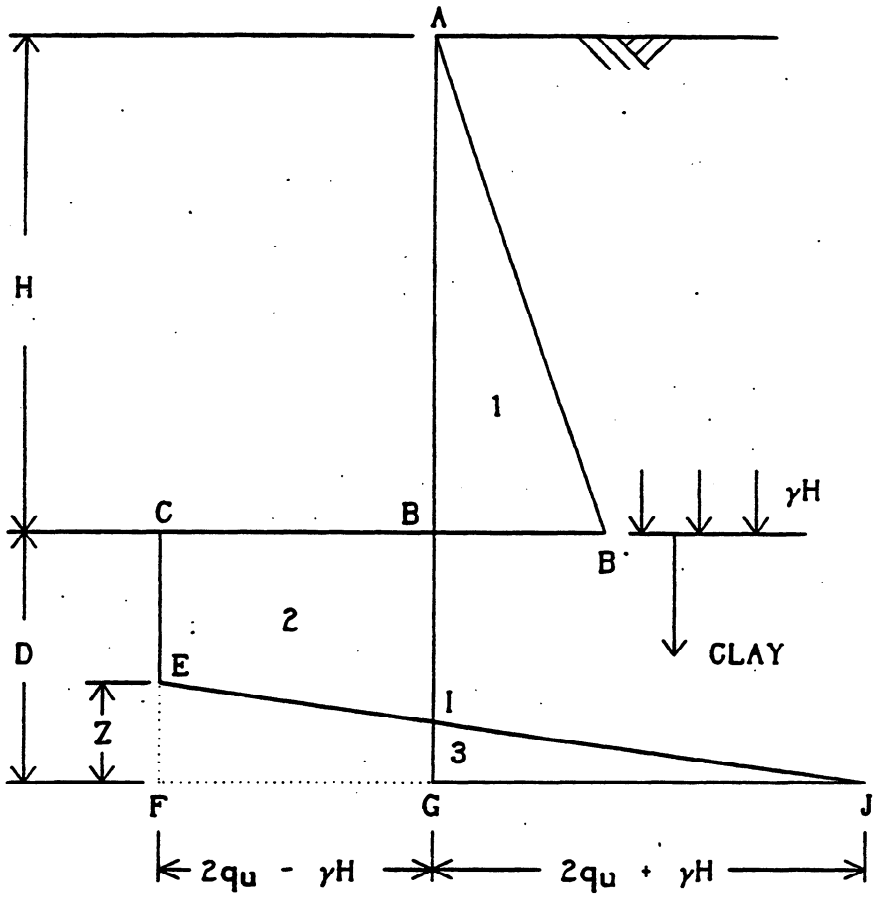

FIGURE 8-12

The procedure from this point is identical to the "$\phi = 0$ method" discussed on the previous page.

SAMPLE PROBLEM 8-3: CANTILEVER SHEET PILE WALL (CLAY)

Given:

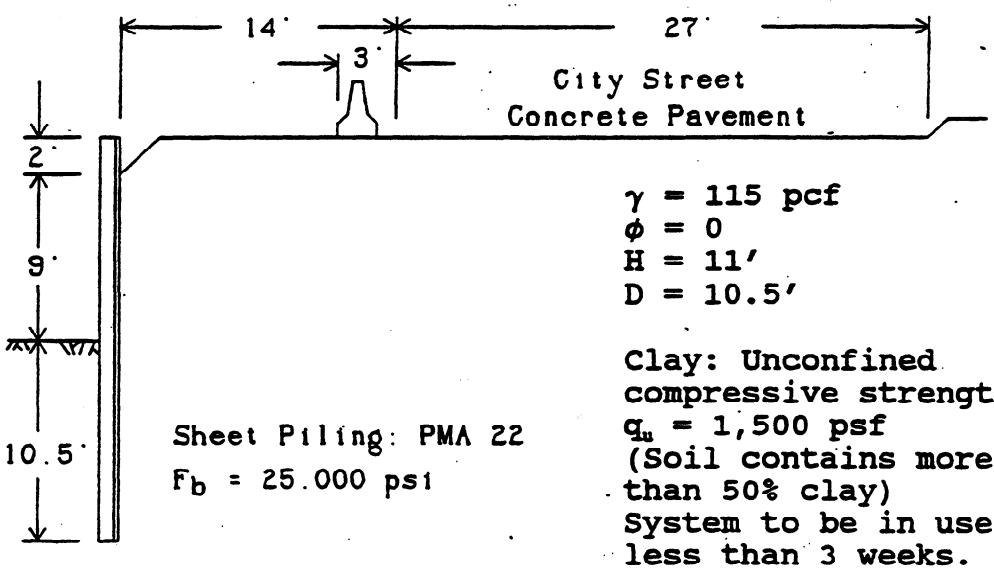

γ = 115 pcf
ϕ = 0
H = 11'
D = 10.5'

Clay: Unconfined compressive strength q_u = 1,500 psf (Soil contains more than 50% clay) System to be in use less than 3 weeks.

FIGURE 8-13

Solution: (Using surcharge values from Chapter 6 tables:)

Depth	K Rail (Q = 200 psf)	Traffic (Q = 300 psf)	Totals
0	0.0	0.0	0
2	6.7	35.2	42
4	11.5	66.7	78
6	13.6	91.4	105
8	13.6	108.7	122
10	12.3	119.1	131
11	11.5	122.1	134

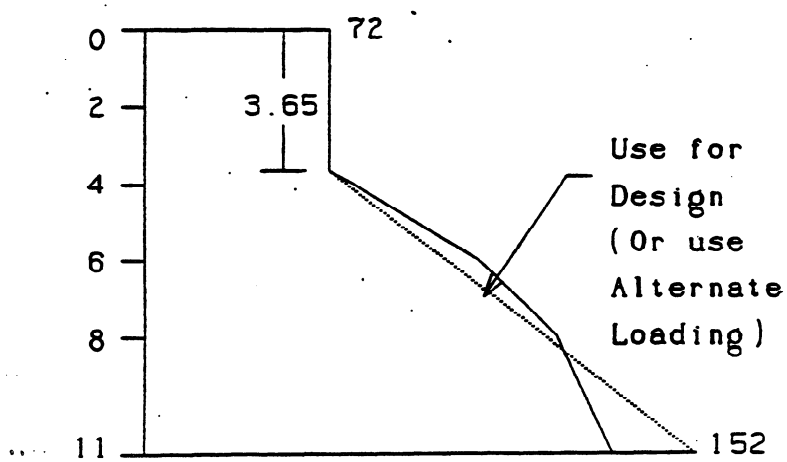

FIGURE 8-14

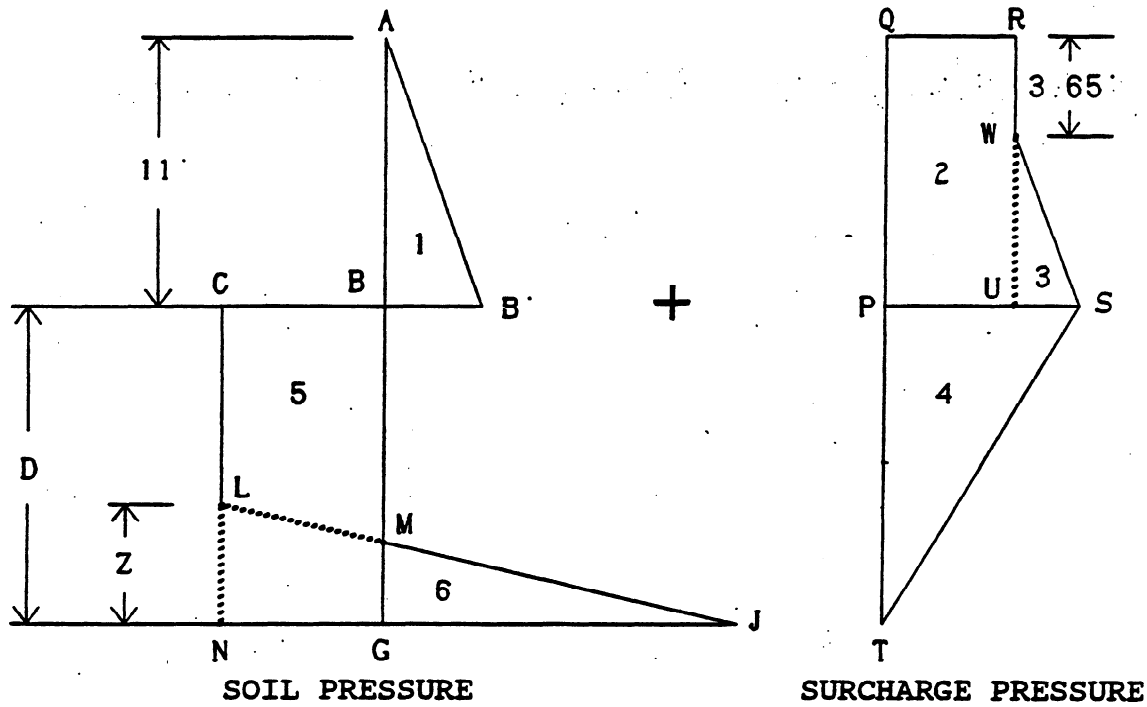

FIGURE 8-15

Use a safety factor of 1.5 for the clay.

$C = q_u/2 = 1500/2 = 750$ psf For F.S. = 1.5 use C/1.5

$C/1.5 = 750/1.5 = 500$ ($\therefore$ Effective $q_u = 2C = 1000$ psf)

Check critical height of the clay.

$H_c = 2q_u/\gamma = 2(1{,}000)/115 = 17.4' > 11'$

The limiting height of the wall is:

$H' \leq C/[0.31(S.F.)(\gamma_e)]$

For $C = 1500/2 = 750$ psf, and S.F. = 1.5:

$H' = 750/[0.31(1.5)(115)] = 14'$ ($14' > 11'$ Used $\therefore$ OK)

$BB' = \gamma H - q_u = 115(11) - 1{,}000 = 265$ psf

$GJ = 2q_u + \gamma H = 2(1{,}000) + 115(11) = 3{,}265$ psf

$CB = 2q_u - \gamma H = 2(1{,}000) - 115(11) = 735$ psf

Dissipate surcharge to zero at depth D (Area 4).

Areas:

1 [ABB′]	0.5(11)(265)	=	1,458			
2 [QRPU]	11(72]	=	792			
3 [WUS]	0.5(7.35)(152 -72)	=	294			
4 [PST]	0.5(152)D	=		76D		
5 [CBGN]	(-735D)	=				-735D
6 [JLN]	0.5(735 + 3,265)Z	=			2,000Z	

$\Sigma F_H = 0$ 2,544 + 76D + 2,000Z - 735D

$\therefore Z = (659D - 2{,}544)/2{,}000 = 0.330D - 1.272$

$\Sigma M_G = 0 = 1{,}458[D + 11/3] + 792[D + 11/2] + 294[D + 7.35/3]$
$+ 76D[2D/3] - 735D[D/2] + 2{,}000Z[Z/3]$

$0 = 1{,}458D + 5{,}346 + 792D + 4{,}356 + 294D + 720 + 51D^2 - 368D^2$
$+ 667Z^2$

$\therefore D^2 - 8.03D - 32.88 - 2.10Z^2 = 0$

By simultaneous solution Z = 2.7′, D = 12.1′ > 10.5′

Use D = 12.1′ (D need not be increased since safety factor was applied to clay).

Locate point of zero shear (x = distance below excavation).
$2{,}544 + x[152 + (152)(12.1 - x)/12.1]/2 - 735x = 0$
$x^2 + 117x - 405 = 0 \quad \therefore x = 3.37$

Surcharge at x = 152(12.1 - 3.37)/12.1 = 110 psf

Pressure area between PS and x = 3.37(152 + 110)/2 = 441 psf

$M_{max} = 1{,}458[3.37 + 11/3] + 792[3.37 + 11/2] + 294[3.37 + 7.35/3]$
$+ 110(3.37)[3.37/2] + \{3.37(152 - 110)/2\}[2/3(3.37)]$
$-735(3.37)[3.37/2]$
$= 15{,}605$ Ft-Lb/LF

S required = 15,605(12)/25,000 = 7.49 > 5.4 in^3 furnished

Anticipate sheet piling deflection of 0.005H = 0.005(11) = 0.055′ or ≈ 5/8". Expect settlement behind sheet piling to a distance of 3 times H = 3(11) = 33′. This settlement distance will have an adverse effect on the adjacent concrete pavement. A propped or tieback sheet pile wall should result in less deflection and settlement problems. Ties to deadmen situated beyond the passive failure wedge or to pile anchors located near the K-rail could furnish support similar to props or tiebacks.

Sample Problems 8-2 and 8-3 were reanalyzed using no surcharge below the excavation depth. A comparison of results for computed depth and moment are tabulated below. This tabulation may be of help in Checking computer results.

The following tabulation is for comparative purposes only:

	Use Surcharge Below Excavation Depth	No Surcharge Below Excavation Depth
Sample Problem 8-2		
D_1	6.13′	5.83′
D	8.17′	7.86′
130%(D)	10.6′	10.2′
M	42,277 Ft-Lb/LF	41,137 Ft-Lb/LF
Sample Problem 8-3		
Z	2.7′	2.6′
D	12.1′	10.7′
M	14,746 Ft-Lb/LF	14,825 Ft-Lb/LF

The following tables furnish selected properties for various steel sheet piles.

Minimum grade of steel is A328 for which F_b = 25 ksi.
Most suppliers also furnish high strength steel, such as A572 (grade 50) F_b = 30 ksi.
Bethlehem Steel also manufactures A690 for which F_b = 41 ksi.
For sheet piles manufactored prior to 1940 or those with no identified grade of steel, use F_b = 22 ksi (A36 equivalent)

BETHLEHEM STEEL CORPORATION STEEL SHEET PILING

Type	Width (in)	Weight per ft of pile (Lb)	Weight per sq ft of wall (Lb)	S per ft of wall (in^3/LF)	I** (in^4)
PZ22	22.0	40.3	22.0	18.1	154.7
PZ27	18.0	40.5	27.0	30.2	276.3
PZ35	22.6	66.0	35.0	48.5	681.5
PZ40	19.7	65.6	40.0	60.7	805.4
PLZ23	24.0	45.2	22.6	30.2	407.5
PLZ25	24.0	49.6	24.8	32.8	446.5
PSA23	16.0	30.7	23.0	2.4	5.5
PS27.5	19.7	45.1	27.5	2.0	5.3
PS31	19.7	50.9	31.0	2.0	5.3

** Note: The moment of inertia (I) listed on this sheet is per pile.

TABLE 8-l

UNITED STATES STEEL SHEET PILING

Type	Width (in)	Weight per ft of pile (Lb)	Weight per sq ft of wall (Lb)	S per ft of wall (in^3/LF)	I** (in^4)
PZ38	18.0	57.0	38.0	46.8	421.0
PZ32	21.0	56.0	32.0	38.3	386.0
PZ27	18.0	40.5	27.0	30.2	276.0
PDA27	16.0	36.0	27.0	10.7	53.0
PMA22	19.6	36.0	22.0	5.4	22.4
PSA28	16.0	37.3	28.0	2.5	6.0
PSA23	16.0	30.7	23.0	2.4	5.5
PSX32	16.5	44.0	32.0	2.4	3.7
PS32	15.0	40.0	32.0	1.9	3.6
PS28	15.0	35.0	28.0	1.9	3.5

** Note: The moment of inertia (I) listed on this sheet is per pile.

TABLE 8-l

CASTEEL USA STEEL SHEET PILING

Type	Width (in)	Weight per ft of pile (Lb)	Weight per sq ft of wall (Lb)	S per ft of wall (in^3/LF)	I (in^4/LF)	r (in)
CL42	21.7	15.5	8.6	2.55	4.5	1.33
CL47	21.7	17.4	9.6	2.88	5.1	1.38
CL57 *	21.7	21.1	11.7	3.53	6.2	1.38
CS60 *	27.6	28.2	12.3	6.98	20.6	2.36
CS76 *	27.6	35.6	15.6	8.89	26.3	2.36
CU94 *	23.6	37.9	19.3	10.19	39.7	2.71
CU81 *	19.7	27.2	16.6	11.16	52.7	3.31
CU104	23.6	41.9	21.3	11.39	44.4	2.71
CU99	19.7	33.3	20.3	13.28	62.8	3.31
CU118	19.7	39.7	24.2	15.80	74.5	3.31
CU110 *	22.7	42.5	22.5	21.39	149.0	4.76
CU116 *	22.7	44.9	23.8	22.32	158.2	4.76
CU122	22.7	47.2	25.0	23.25	164.8	4.76
CZ84 *	21.7	31.1	17.2	13.62	53.6	3.27
CZ95	21.7	35.2	19.5	15.53	61.2	3.27
CZ107 *	21.7	39.6	21.9	17.48	68.8	3.27
CZ113	21.7	41.7	23.1	18.40	72.7	3.27
CZ114	24.0	46.8	23.4	31.62	211.6	5.55
CZ128	24.0	52.3	26.2	35.34	236.5	5.55
CZ141	24.0	57.9	28.9	39.06	261.4	5.55
CZ148	24.0	60.7	30.3	40.92	273.9	5.55

* Supplied only by special arrangement with the mill.

TABLE 8-l

LARSSEN STEEL SHEET PILING

Type	Width (in)	Weight per ft of pile (Lb)	Weight per sq ft of wall (Lb)	S per ft of wall (in^3/LF)	I (in^4/LF)	r (in)
SL1	14.4	13.8	11.5	2.83	4.5	1.15
SL2	17.7	21.8	14.7	5.58	14.3	1.81
SL3	17.7	25.5	17.3	10.20	40.3	2.80
SL4	17.7	31.5	21.3	15.80	77.6	3.52
31	17.7	30.2	20.5	8.55	25.3	2.05
I	15.8	26.9	20.5	9.3	27.1	2.13
II	15.8	32.8	25.0	15.8	62.2	2.91
III	15.8	41.7	31.8	25.3	123.0	3.62
IV	15.8	50.3	38.3	37.9	231.0	4.53
V	16.5	67.2	48.7	55.1	372.0	5.12
VI	16.5	82.0	59.4	78.1	673.0	6.22
IIn	15.8	32.8	25.0	20.5	109.0	3.84
IIIn	15.8	41.7	31.8	29.8	170.0	4.27
IIs	19.7	46.8	28.5	29.8	201.0	4.90
IIIs	19.7	52.1	32.4	37.2	278.0	5.41
IVs	19.7	59.1	36.1	46.5	401.0	6.16
Vs	19.7	71.2	43.4	59.5	527.0	6.43

TABLE 8-1

ARBED Esch-Belval STEEL SHEET PILING

Type	Width (in)	Weight per ft of pile (Lb)	Weight per sq ft of wall (Lb)	S per ft of wall (in^3/LF)	I (in^4/LF)	r (in)
BZ 0	19.7	34.9	21.3	9.7	25.7	2.03
BZ 0R	19.7	42.2	25.7	11.4	30.2	2.00
BZ 155	21.7	34.4	19.1	14.0	52.2	3.05
BZ 250	19.7	37.7	23.0	22.3	105.5	3.95
BZ 350	19.7	43.9	26.8	31.1	180.4	4.79
BZ 450	19.7	57.1	34.8	48.4	333.2	5.70
BZ 550	19.7	69.9	42.6	59.5	410.1	5.72
BZ IR	16.5	34.4	25.0	16.0	52.6	2.68
BZ IIN	17.7	36.9	25.0	22.3	96.7	3.63
BZ IIR	17.7	42.3	28.7	25.5	111.4	3.64
BZ IIIN	17.7	46.9	31.7	33.3	170.4	4.28
BZ IIIR	17.7	55.9	37.9	39.3	203.2	4.27
BZ IVNE	19.7	53.4	32.6	38.1	217.6	4.77
BZ IVN	17.7	53.2	36.0	43.9	259.2	4.95
BZ IVR	17.7	65.0	44.0	53.2	318.3	4.96
BZ VN	19.7	79.6	48.5	69.2	476.7	5.78
BZ VR	19.7	91.4	55.7	78.5	547.0	5.78

TABLE 8-l

ARBED STEEL SHEET PILING

Type	Width	Weight		S	I	r
	(in)	per ft of pile (Lb)	per sq ft of wall (Lb)	per ft of wall (in^3/LF)	(in^4/LF)	(in)
AZ 13	26.38	48.38	21.92	24.2	144.3	4.72
AZ 18	24.80	49.99	24.17	33.5	250.4	5.94
AZ 26	24.80	65.72	31.75	48.4	406.5	6.59
AZ 36	24.80	82.11	39.73	67.0	606.3	7.21
BZ 6	19.7	42.8	26.1	11.5	30.4	1.99
BZ 7	21.7	34.3	19.0	14.0	52.5	3.07
BZ 8.6	21.7	39.5	21.9	16.0	60.8	3.08
BZ 12	19.7	37.7	23.0	22.3	106.4	3.97
BZ 16.4	19.7	43.3	26.4	30.5	180.0	4.82
BZ 17	19.7	44.0	26.8	31.1	183.7	4.83
BZ 20	19.7	53.9	32.9	37.6	214.8	4.72
BZ 26	19.7	56.9	34.7	48.2	331.9	5.71
BZ 32	19.7	69.8	42.5	59.4	411.7	5.74
BZ 37	19.7	78.6	47.9	67.9	467.7	5.76
BZ 42	19.7	90.9	55.4	78.1	541.3	5.76

TABLE 8-l

HOESCH STEEL SHEET PILING

Type	Width (in)	Weight per ft of pile (Lb)	Weight per sq ft of wall (Lb)	S per ft of wall (in^3/LF)	I (in^4/LF)	r (in)
95	20.7	33.5	19.5	13.95	52.2	3.03
116	20.7	40.9	23.8	22.32	109.9	3.98
122	20.7	43.1	25.0	17.48	65.4	2.99
134	20.7	47.3	27.4	31.62	186.8	4.81
155	20.7	54.7	31.7	37.20	219.7	4.85
175	20.7	61.8	35.8	48.36	323.7	5.56
215	20.7	75.9	44.0	58.59	392.2	5.52

TABLE 8-l

FOSTER STEEL SHEET PILING

Type	Width (in)	Weight per ft of pile (Lb)	Weight per sq ft of wall (Lb)	S per ft of wall (in^3/LF)	I (in^4/LF)	r (in)
FZ-7	24.0	46.8	23.4	21.60		
FZ-9	24.0	52.3	26.2	35.30		
RZ10	21.7	47.7	26.4	30.50	172.1	5.35
RZ11	19.1	47.7	30.0	37.20	220.4	5.35
RZ20	21.7	64.0	35.4	49.50	341.1	5.74
RZ30	21.7	82.0	45.5	71.60	565.3	6.17

TABLE 8-l